Ankr-TITE® Wedge Anchors

wej-it HIGH-PERFORMANCE ANCHORS

Description

The Ankr-TITE Wedge Anchor is a high-strength, fully threaded, and torque-controlled expansion anchor designed for anchoring into normal-weight concrete, lightweight concrete, and grouted concrete masonry. The Ankr-TITE anchor has a unique **machine lathed expansion cone** that supports a thick **three dimple clip** engineered to provide high load carrying capability and reduce slip in a variety of installation conditions. "Bolt size is hole size" – the drill bit diameter needed for proper installation is the same as the anchor diameter.

USA ENGINEERED

Key Features & Benefits

- **Machine lathed expansion cone** provides precise, rapid expansion
  - Similar products are just cold-formed
- Enlarged **3 dimple clip**
  - Reduce slip
  - Increase response in light-weight concrete
- **Unique safety shoulder**
  - Supports clip when anchor is under strain - prevents clip from jumping onto threads during installation
  - Minimizes bolt-end collapse and/or clip slippage under ultimate loading conditions
- **Dog- point head** prevents point damage during installation
- Length identification code stamped on each anchor – easy visual inspection
- 360° segment contact on clip equalizes load distribution
  - Increases load-carrying capacity
  - More adaptable to "forgiving" in different installation conditions

(continues on page 2)

Specifications, Listings and Approvals

Diameters: 1/4" - 1-1/4"

Materials:

AT Style (Zinc-Plated Carbon Steel):
- ***Body:*** UNS G 10350, AISI 1035
- ***Clip:*** ASTM A108 Grade 1018
- ***Washer:*** Carbon Steel; NSI/ASME B18.22.1
- ***Nut:*** Carbon Steel; ANSI/ASME B18.2.2
- ***Plating:*** Zinc: ASTM B633 Type III

ATG Style (Hot-Dip Galvanized):
- ***Body:*** UNS G 10350, AISI 1035
- ***Clip:*** Type 304 Stainless Steel
- ***Washer:*** Carbon Steel; NSI/ASME B18.22.1
- ***Nut:*** Carbon Steel; ANSI/ASME B18.2.2
- ***Plating:*** SC1 Hot-dip galvanized: ASTM A153

(continues on page 2)

Key Features & Benefits (continued from page 1)

- Available in four combinations:
  - Zinc-plated Grade 5 Steel
  - Hot-dip galvanized carbon steel with 304 stainless steel clip
  - 304 stainless steel
  - 316 stainless steel
- Sets up fast
- Fewer rotations to achieve required torque

Applications

- Shelving
- Racking
- Railings
- Structural Connections
- Safety-Related Attachments
- Machinery
- Sill and Support Ledgers
- Lighting Standards and Base Plates
- Industrial Equipment

Specifications, Listings and Approvals *(continued)*

ATS Style (Type 304 Stainless Steel):

– ***Body:*** AISI 12L14 Type 304 Stainless Steel

– ***Clip, Washer & Nut:*** Type 304 Stainless Steel

ATSS Style (Type 316 Stainless Steel):

– ***Body:*** AISI 12L14 Type 304 Stainless Steel

– ***Clip, Washer & Nut:*** Type 304 Stainless Steel

Federal Specifications:

– QQZ-3252, Type ll, Class 3

– GSA FFS-325 Group ll, Type 4, Class 1 (Clear Chromate Added)

– GSA FFS-325 Group ll, Type 4, Class

Code Compliance:

– Miami/Dade NOA: No. 13-0701.05

– State DOT Approvals: Call Customer Service for specific information by state

Installation Information

Instructions

1. Drill the hole, whose diameter equals the anchor diameter, perpendicular to the work surface. To assure full holding power, do not ream the hole or allow the drill to wobble.

   Drill the hole deeper than the intended embedment, but not closer than two diameters to the opposite surface of the concrete.

2. A clean hole is necessary for proper performance. Clean the hole using a nylon brush and compressed air.

3. Assemble the nut and washer onto the anchor. Drive the anchor through the material to be fastened at the calculated embedment depth.

4. Tighten the nut, or head, 3 to 5 turns past the hand tight position. Installing with a torque wrench is recommended for optimum performance. Refer to Recommended Setting Torque* in the table below.

NOTE: Always wear safety glasses. Follow drill manufacturer's instructions. Use only solid carbide-tipped drill bits meeting ANSI B212.15 diameter standards.

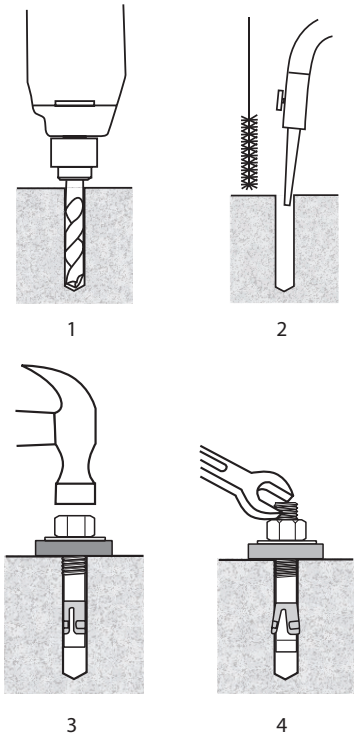

Installation Data

Anchor Dia. (in.)	Drill Bit Dia. (in.)	Fixture Clearance Hole (in.)	Thread Size (UNC)	Nut Height (in.)	Washer Diameter (in.)	Wrench Size (in.)	Recommended Setting Torque (ft-lbs)*		
							Zinc & Galvanized	Stainless Steel	W/O Inspection Turns to Set
1/4	1/4	5/16	1/4-20	7/32	5/8	7/16	6-8	4-8	3-5
3/8	3/8	7/16	3/8-16	21/64	13/16	9/16	20-25	20-25	3-5
1/2	1/2	9/16	1/2-13	7/16	1-1/16	3/4	50-55	40-50	3-5
5/8	5/8	11/16	5/8-11	35/64	1-3/4	15/16	90-95	80-90	3-5
3/4	3/4	13/16	3/4 -10	41/64	2	1-1/8	165-175	145-155	3-5
7/8	7/8	15/16	7/8-9	3/4	2-1/4	1-5/16	240-250	220-230	3-5
1	1	1-1/8	1-8	55/64	2-1/2	1-1/2	290-300	255-280	3-5
1-1/4	1-1/4	1-3/8	11/4-7	1-1/16	3	1-7/8	400-410	390-400	3-5

*Installation torque is listed for anchors installed in normal weight concrete

Tie-Wire Anchor

Anchor Dia. (in.)	Drill Bit Dia. (in.)	Tie-Wire Hole Size (in.)	Head Height (in.)
1/4	1/4	9/32	3/4

Length Identification Codes

Code	Length of Anchor	Code	Length of Anchor	Code	Length of Anchor
A	1-1/2 < 2	H	5 < 5-1/2	O	8-1/2 < 9
B	2 < 2-1/2	I	5-1/2 < 6	P	9 < 9-1/2
C	2-1/2 < 3	J	6 < 6-1/2	Q	9-1/2 < 10
D	3 < 3-1/2	K	6-1/2 < 7	R	10 < 11
E	3-1/2 < 4	L	7 < 7-1/2	S	11 < 12
F	4 < 4-1/2	M	7-1/2 < 8	T	12 < 13
G	4-1/2 < 5	N	8 < 8-1/2	U	13 < 14
				V	14 < 15

Performance Data

Allowable Tension Loads (lbs.) – Normal-Weight Concrete

PSI	Dia. (in.)	Embedment Depth (in.)																		
		1-1/4	**1-1/2**	**1-3/4**	**2**	**2-1/4**	**2-1/2**	**2-3/4**												
2k	1/4	360	410	450	480	530	590	620												
4K		420	530	530	530	560	600	650												
6k		470	530	540	540	580	640	690												
		1-3/4	**2**	**2-1/4**	**2-1/2**	**2-3/4**	**3**	**3-1/4**	**3-1/2**	**3-3/4**	**4**	**4-1/4**	**4-1/2**	**4-5/8**						
2K	3/8	530	730	800	830	890	930	970	1020	1060	1130	1180	1210	1260						
4K		970	1010	1060	1110	1160	1200	1250	1290	1340	1390	1440	1490	1510						
6K		1200	1240	1280	1320	1360	1400	1440	1480	1520	1560	1600	1640	1660						
		2-1/8	**2-1/2**	**2-3/4**	**3**	**3-1/4**	**3-1/2**	**3-3/4**	**4**	**4-1/4**	**4-1/2**	**4-3/4**	**5**	**5-1/4**	**5-1/2**	**5-3/4**	**6**	**6-1/4**		
2K	1/2	970	1010	1050	1110	1160	1200	1230	1250	1280	1340	1350	1390	1420	1490	1520	1560	1610		
4K		1580	1630	1660	1690	1720	1750	1770	1800	1830	1890	1890	1920	1950	1980	2010	2040	2070		
6K		1890	1960	2010	2060	2110	2150	2200	2250	2300	2350	2390	2440	2490	2540	2590	2630	2680		
		2-5/8	**2-3/4**	**3**	**3-1/4**	**3-1/2**	**3-3/4**	**4**	**4-1/4**	**4-1/2**	**4-3/4**	**5**	**5-1/4**	**5-1/2**	**5-3/4**	**6**	**6-1/4**	**6-1/2**	**6-3/4**	**7**
2K	5/8	1610	1690	1790	1910	2020	2140	2320	2410	2470	2550	2670	2760	2860	2960	3060	3120	3150	3190	3210
4K		2390	2440	2560	2680	2800	2920	3030	3150	3270	3390	3510	3620	3740	3860	3980	4050	4080	4110	4150
6K		2650	2700	2820	2940	3050	3160	3300	3390	3500	3610	3730	3840	3950	4070	4180	4260	4310	4340	4360
		3-3/4	**4**	**4-1/4**	**4-1/2**	**4-3/4**	**5**	**5-1/4**	**5-1/2**	**5-3/4**	**6**	**6-1/4**	**6-1/2**	**6-3/4**	**7**	**7-1/4**	**7-1/2**	**7-3/4**	**7-7/8**	
2K	3/4	2100	2200	2310	2420	2530	2650	2750	2840	2910	2980	3050	3150	3230	3280	3350	3410	3480	3540	
4K		3290	3390	3490	3590	3690	3790	3890	3990	4090	4200	4300	4400	4500	4600	4700	4800	4900	4950	
6K		4750	4830	4910	4980	5060	5140	5220	5300	5370	5450	5530	5610	5690	5770	5840	5920	6000	6040	
		4	**4-1/4**	**4-1/2**	**4-3/4**	**5**	**5-1/4**	**5-1/2**	**5-3/4**	**6**	**6-1/4**	**6-1/2**	**6-3/4**	**7**	**7-1/4**	**7-1/2**	**7-3/4**	**8**		
2K	7/8	2130	2310	2440	2560	2630	2690	2750	2820	2920	3030	3130	3240	3340	3490	3650	3790	3940		
4K		4150	4320	4490	4660	4830	5000	5170	5340	5510	5680	5850	6020	6190	6360	6530	6700	6870		
6K		4990	5200	5400	5610	5810	6020	6220	6430	6640	6840	7050	7250	7460	7660	7870	8080	8280		
		5	**5-1/4**	**5-1/2**	**5-3/4**	**6**	**6-1/4**	**6-1/2**	**6-3/4**	**7**	**7-1/4**	**7-1/2**	**7-3/4**	**8**	**8-1/4**	**8-1/2**	**8-3/4**	**9**		
2K	1	2810	3110	3430	3670	3910	4150	4390	4630	4870	5110	5340	5610	5830	6060	6300	6570	6790		
4K		6670	6820	6970	7120	7270	7410	7560	7710	7860	8010	8160	8300	8450	8600	8750	8900	9050		
6K		7670	7810	7970	8160	8270	8150	8630	8680	8920	9040	9120	9320	9490	9600	9750	9960	10130		
		5-5/8	**5-3/4**	**6**	**6-1/4**	**6-1/2**	**6-3/4**	**7**	**7-1/4**	**7-1/2**	**7-3/4**	**8**	**8-1/4**	**8-1/2**	**8-3/4**	**9**	**9-1/4**	**9-1/2**	**9-3/4**	**10**
2K	1-1/4	4310	4660	5040	5390	5770	6140	6500	6560	6630	6690	6750	6820	6890	6950	7010	7070	7130	7190	7260
4K		7190	7340	7650	7960	8270	8580	8890	9200	9510	9820	10130	10440	10750	11050	11360	11670	11980	12290	12600
6K		9260	9560	9850	10160	10480	10790	11080	11390	11680	12000	12300	12620	12900	13230	13520	13840	14140	14430	14750

*Allowable load capacities are calculated using an applied safety factor of 4:1

Performance Data

Ultimate Tension Loads (lbs.) – Normal-Weight Concrete

PSI	Dia. (in.)	Embedment Depth (in.)																		
		1-1/4	**1-1/2**	**1-3/4**	**2**	**2-1/4**	**2-1/2**	**2-3/4**												
2k	1/4	1430	1640	1770	1910	2120	2350	2470												
4k		1650	2090	2120	2120	2220	2380	2590												
6k		1860	2110	2140	2140	2300	2540	2750												
		1-3/4	**2**	**2-1/4**	**2-1/2**	**2-3/4**	**3**	**3-1/4**	**3-1/2**	**3-3/4**	**4**	**4-1/4**	**4-1/2**	**4-5/8**						
2K	3/8	2120	2910	3170	3320	3560	3700	3880	4050	4230	4490	4700	4840	5040						
4K		3850	4040	4230	4420	4610	4790	4980	5160	5360	5550	5740	5930	6020						
6K		4790	4950	5110	5270	5430	5590	5750	5910	6070	6230	6390	6560	6640						
		2-1/8	**2-1/2**	**2-3/4**	**3**	**3-1/4**	**3-1/2**	**3-3/4**	**4**	**4-1/4**	**4-1/2**	**4-3/4**	**5**	**5-1/4**	**5-1/2**	**5-3/4**	**6**	**6-1/4**		
2K	1/2	3860	4040	4170	4440	4610	4780	4890	5000	5110	5330	5400	5550	5660	5930	6060	6220	6420		
4K		6320	6500	6620	6730	6850	6970	7080	7200	7320	7530	7550	7670	7780	7900	8020	8130	8250		
6K		7540	7830	8020	8210	8410	8600	8790	8980	9180	9370	9560	9750	9940	10140	10330	10520	10710		
		2-5/8	**2-3/4**	**3**	**3-1/4**	**3-1/2**	**3-3/4**	**4**	**4-1/4**	**4-1/2**	**4-3/4**	**5**	**5-1/4**	**5-1/2**	**5-3/4**	**6**	**6-1/4**	**6-1/2**	**6-3/4**	**7**
2K	5/8	6410	6730	7150	7640	8060	8550	9270	9640	9880	10200	10650	11020	11430	11840	12210	12450	12600	12730	12820
4K		9530	9760	10230	10710	11180	11650	12120	12590	13060	13540	14010	14480	14950	15420	15890	16170	16320	16440	16580
6K		10600	10800	11280	11730	12180	12630	13190	13540	13990	14440	14900	15350	15800	16250	16710	17040	17210	17360	17420
		3-3/4	**4**	**4-1/4**	**4-1/2**	**4-3/4**	**5**	**5-1/4**	**5-1/2**	**5-3/4**	**6**	**6-1/4**	**6-1/2**	**6-3/4**	**7**	**7-1/4**	**7-1/2**	**7-3/4**	**7-7/8**	
2K	3/4	8390	8770	9230	9660	10120	10600	10980	11330	11640	11890	12200	12570	12890	13110	13380	13620	13920	14160	
4K		13130	13530	13940	14340	14750	15150	15550	15960	16360	16770	17170	17570	17980	18380	18790	19190	19590	19800	
6K		18980	19290	19610	19920	20230	20540	20860	21170	21480	21800	22110	22420	22740	23050	23360	23680	23990	24150	
		4	**4-1/4**	**4-1/2**	**4-3/4**	**5**	**5-1/4**	**5-1/2**	**5-3/4**	**6**	**6-1/4**	**6-1/2**	**6-3/4**	**7**	**7-1/4**	**7-1/2**	**7-3/4**	**8**		
2K	7/8	8520	9230	9740	10240	10490	10740	11000	11250	11670	12100	12510	12950	13340	13940	14570	15140	15740		
4K		16590	17270	17950	18630	19310	20000	20680	21360	22040	22720	23400	24080	24760	25440	26120	26800	27480		
6K		19950	20770	21590	22410	23240	24060	24880	25710	26530	27350	28180	29000	29820	30640	31470	32290	33110		
		5	**5-1/4**	**5-1/2**	**5-3/4**	**6**	**6-1/4**	**6-1/2**	**6-3/4**	**7**	**7-1/4**	**7-1/2**	**7-3/4**	**8**	**8-1/4**	**8-1/2**	**8-3/4**	**9**		
2K	1	11220	12440	13720	14680	15620	16570	17560	18520	19450	20440	21360	22410	23320	24220	25200	26270	27160		
4K		26680	27280	27860	28470	29050	29640	30240	30830	31420	32020	32610	33200	33800	34390	34980	35580	36170		
6K		30680	31230	31870	32610	33060	32590	34520	34700	35660	36140	36480	37250	37950	38400	38990	39830	40510		
		5-5/8	**5-3/4**	**6**	**6-1/4**	**6-1/2**	**6-3/4**	**7**	**7-1/4**	**7-1/2**	**7-3/4**	**8**	**8-1/4**	**8-1/2**	**8-3/4**	**9**	**9-1/4**	**9-1/2**	**9-3/4**	**10**
2K	1-1/4	17210	18630	20160	21560	23050	24530	25970	26230	26510	26730	26970	27260	27540	27770	28020	28270	28500	28760	29040
4K		28730	29350	30590	31830	33060	34300	35540	36780	38020	39250	40490	41730	42970	44200	45440	46680	47920	49150	50390
6K		37040	38240	39400	40620	41900	43150	44310	45530	46720	47970	49180	50460	51590	52890	54070	55330	56550	57720	58990

*Allowable load capacities are calculated using an applied safety factor of 4:1

Performance Data

Allowable Shear Loads (lbs.) – Normal-Weight Concrete

PSI	Dia. (in.)	Embedment Depth (in.)																		
		1-1/4	**1-1/2**	**1-3/4**	**2**	**2-1/4**	**2-1/2**	**2-3/4**												
2k	1/4	600	600	600	600	600	600	600												
4K		630	630	630	630	630	630	630												
6k		630	630	630	630	630	630	630												
		1-3/4	**2**	**2-1/4**	**2-1/2**	**2-3/4**	**3**	**3-1/4**	**3-1/2**	**3-3/4**	**4**	**4-1/4**	**4-1/2**	**4-5/8**						
2K	3/8	910	910	910	910	910	910	910	910	910	970	970	970	970						
4K		980	980	980	980	980	980	980	980	980	1300	1300	1300	1300						
6K		980	980	980	980	980	980	980	980	980	1300	1300	1300	1300						
		2-1/8	**2-1/2**	**2-3/4**	**3**	**3-1/4**	**3-1/2**	**3-3/4**	**4**	**4-1/4**	**4-1/2**	**4-3/4**	**5**	**5-1/4**	**5-1/2**	**5-3/4**	**6**	**6-1/4**		
2K	1/2	1650	1650	1650	1650	1650	1650	1650	1650	1650	1650	1650	1650	1800	1800	1800	1800	1800		
4K		1730	1730	1730	1730	1730	1730	1730	1730	1730	1730	1730	1730	1880	1880	1880	1880	1880		
6K		1730	1730	1730	1730	1730	1730	1730	1730	1730	1730	1730	1730	1880	1880	1880	1880	1880		
		2-5/8	**2-3/4**	**3**	**3-1/4**	**3-1/2**	**3-3/4**	**4**	**4-1/4**	**4-1/2**	**4-3/4**	**5**	**5-1/4**	**5-1/2**	**5-3/4**	**6**	**6-1/4**	**6-1/2**	**6-3/4**	**7**
2K	5/8	2350	2350	2350	2350	2350	2350	2350	2350	2350	2350	2350	2350	2350	2350	2350	2470	2470	2470	2470
4K		2990	2990	2990	2990	2990	2990	2990	2990	2990	2990	2990	2990	2990	2990	2990	3080	3080	3080	3080
6K		2990	2990	2990	2990	2990	2990	2990	2990	2990	2990	2990	2990	2990	2990	2990	3080	3080	3080	3080
		3-3/4	**4**	**4-1/4**	**4-1/2**	**4-3/4**	**5**	**5-1/4**	**5-1/2**	**5-3/4**	**6**	**6-1/4**	**6-1/2**	**6-3/4**	**7**	**7-1/4**	**7-1/2**	**7-3/4**	**7-7/8**	
2K	3/4	3110	3110	3110	3110	3110	3110	3110	3110	3110	3110	3110	3110	3110	3430	3430	3430	3430	3430	
4K		3970	3970	3970	3970	3970	3970	3970	3970	3970	3970	3970	3970	3970	5960	5960	5960	5960	5960	
6K		3970	3970	3970	3970	3970	3970	3970	3970	3970	3970	3970	3970	3970	5960	5960	5960	5960	5960	
		4	**4-1/4**	**4-1/2**	**4-3/4**	**5**	**5-1/4**	**5-1/2**	**5-3/4**	**6**	**6-1/4**	**6-1/2**	**6-3/4**	**7**	**7-1/4**	**7-1/2**	**7-3/4**	**8**		
2K	7/8	6930	6930	6930	6930	6930	6930	6930	6930	6930	6930	6930	6930	6930	7100	7100	7100	7100		
4K		8130	8130	8130	8130	8130	8130	8130	8130	8130	8130	8130	8130	8130	9230	9230	9230	9230		
6K		8130	8130	8130	8130	8130	8130	8130	8130	8130	8130	8130	8130	8130	9230	9230	9230	9230		
		5	**5-1/4**	**5-1/2**	**5-3/4**	**6**	**6-1/4**	**6-1/2**	**6-3/4**	**7**	**7-1/4**	**7-1/2**	**7-3/4**	**8**	**8-1/4**	**8-1/2**	**8-3/4**	**9**		
2K	1	6923	6923	6923	6923	6923	6923	6923	6923	6923	6923	6923	6923	6923	7098	7098	7098	7098		
4K		8123	8123	8123	8123	8123	8123	8123	8123	8123	8123	8123	8123	8123	9225	9225	9225	9225		
6K		8123	8123	8123	8123	8123	8123	8123	8123	8123	8123	8123	8123	8123	9225	9225	9225	9225		
		5-5/8	**5-3/4**	**6**	**6-1/4**	**6-1/2**	**6-3/4**	**7**	**7-1/4**	**7-1/2**	**7-3/4**	**8**	**8-1/4**	**8-1/2**	**8-3/4**	**9**	**9-1/4**	**9-1/2**	**9-3/4**	**10**
2K	1-1/4	11750	11750	11750	11750	11750	11750	11750	11750	11750	11750	11750	11750	11750	11750	11750	11750	11750	11750	
4K		11750	11750	11750	11750	11750	11750	11750	11750	11750	11750	11750	11750	11750	11750	11750	11750	11750	11750	
6K		11750	11750	11750	11750	11750	11750	11750	11750	11750	11750	11750	11750	11750	11750	11750	11750	11750	11750	

*Allowable load capacities are calculated using an applied safety factor of 4:1

Performance Data

Ultimate Shear Loads (lbs.) – Normal-Weight Concrete

PSI	Dia. (in.)	Embedment Depth (in.)																		
		1-1/4	**1-1/2**	**1-3/4**	**2**	**2-1/4**	**2-1/2**	**2-3/4**												
2k	1/4	2370	2370	2370	2370	2370	2370	2370												
4k		2510	2510	2510	2510	2510	2510	2510												
6k		2510	2510	2510	2510	2510	2510	2510												
		1-3/4	**2**	**2-1/4**	**2-1/2**	**2-3/4**	**3**	**3-1/4**	**3-1/2**	**3-3/4**	**4**	**4-1/4**	**4-1/2**	**4-5/8**						
2K	3/8	3610	3610	3610	3610	3610	3610	3610	3610	3610	3880	3880	3880	3880						
4K		3920	3920	3920	3920	3920	3920	3920	3920	3920	5190	5190	5190	5190						
6K		3920	3920	3920	3920	3920	3920	3920	3920	3920	5190	5190	5190	5190						
		2-1/8	**2-1/2**	**2-3/4**	**3**	**3-1/4**	**3-1/2**	**3-3/4**	**4**	**4-1/4**	**4-1/2**	**4-3/4**	**5**	**5-1/4**	**5-1/2**	**5-3/4**	**6**	**6-1/4**		
2K	1/2	6580	6580	6580	6580	6580	6580	6580	6580	6580	6580	6580	6580	7170	7170	7170	7170	7170		
4K		6920	6920	6920	6920	6920	6920	6920	6920	6920	6920	6920	6920	7510	7510	7510	7510	7510		
6K		6920	6920	6920	6920	6920	6920	6920	6920	6920	6920	6920	6920	7510	7510	7510	7510	7510		
		2-5/8	**2-3/4**	**3**	**3-1/4**	**3-1/2**	**3-3/4**	**4**	**4-1/4**	**4-1/2**	**4-3/4**	**5**	**5-1/4**	**5-1/2**	**5-3/4**	**6**	**6-1/4**	**6-1/2**	**6-3/4**	**7**
2K	5/8	9390	9390	9390	9390	9390	9390	9390	9390	9390	9390	9390	9390	9390	9390	9390	9860	9860	9860	9860
4K		11950	11950	11950	11950	11950	11950	11950	11950	11950	11950	11950	11950	11950	11950	11950	12310	12310	12310	12310
6K		11950	11950	11950	11950	11950	11950	11950	11950	11950	11950	11950	11950	11950	11950	11950	12310	12310	12310	12310
		3-3/4	**4**	**4-1/4**	**4-1/2**	**4-3/4**	**5**	**5-1/4**	**5-1/2**	**5-3/4**	**6**	**6-1/4**	**6-1/2**	**6-3/4**	**7**	**7-1/4**	**7-1/2**	**7-3/4**	**7-7/8**	
2K	3/4	12440	12440	12440	12440	12440	12440	12440	12440	12440	12440	12440	12440	12440	13700	13700	13700	13700	13700	
4K		15860	15860	15860	15860	15860	15860	15860	15860	15860	15860	15860	15860	15860	23810	23810	23810	23810	23810	
6K		15860	15860	15860	15860	15860	15860	15860	15860	15860	15860	15860	15860	15860	23810	23810	23810	23810	23810	
		4	**4-1/4**	**4-1/2**	**4-3/4**	**5**	**5-1/4**	**5-1/2**	**5-3/4**	**6**	**6-1/4**	**6-1/2**	**6-3/4**	**7**	**7-1/4**	**7-1/2**	**7-3/4**	**8**		
2K	7/8	19180	19180	19180	19180	19180	19180	19180	19180	19180	19180	19180	19180	20260	20260	20260	20260	20260		
4K		24220	24220	24220	24220	24220	24220	24220	24220	24220	24220	24220	24220	25740	25740	25740	25740	25740		
6K		24220	24220	24220	24220	24220	24220	24220	24220	24220	24220	24220	24220	25740	25740	25740	25740	25740		
		5	**5-1/4**	**5-1/2**	**5-3/4**	**6**	**6-1/4**	**6-1/2**	**6-3/4**	**7**	**7-1/4**	**7-1/2**	**7-3/4**	**8**	**8-1/4**	**8-1/2**	**8-3/4**	**9**		
2K	1	27690	27690	27690	27690	27690	27690	27690	27690	27690	27690	27690	27690	27690	28390	28390	28390	28390		
4K		32490	32490	32490	32490	32490	32490	32490	32490	32490	32490	32490	32490	32490	36900	36900	36900	36900		
6K		32490	32490	32490	32490	32490	32490	32490	32490	32490	32490	32490	32490	32490	36900	36900	36900	36900		
		5-5/8	**5-3/4**	**6**	**6-1/4**	**6-1/2**	**6-3/4**	**7**	**7-1/4**	**7-1/2**	**7-3/4**	**8**	**8-1/4**	**8-1/2**	**8-3/4**	**9**	**9-1/4**	**9-1/2**	**9-3/4**	**10**
2K	1-1/4	46970	46970	46970	46970	46970	46970	46970	46970	46970	46970	46970	46970	46970	46970	46970	46970	46970	46970	46970
4K		46970	46970	46970	46970	46970	46970	46970	46970	46970	46970	46970	46970	46970	46970	46970	46970	46970	46970	46970
6K		46970	46970	46970	46970	46970	46970	46970	46970	46970	46970	46970	46970	46970	46970	46970	46970	46970	46970	46970

*Allowable load capacities are calculated using an applied safety factor of 4:1

Performance Data

Ultimate and Allowable Loads (lbs.) – Metal Deck into Structural Lightweight Concrete

Anchor Diameter (in.)	Install Torque (ft.-lbs.)	Min. Embed. Depth (in.)	20 Gage Metal Deck with 3,000 psi Concrete							
			Minimum 1-1/2" Wide Deck				Minimum 4-1/2" Wide Deck			
			Allowable		Ultimate		Allowable		Ultimate	
			Tension	Shear	Tension	Shear	Tension	Shear	Tension	Shear
1/4	6-8	1-1/4	255	540	1010	2160	253	540	1010	2160
3/8	20-25	1-3/4	265	935	1060	3740	423	935	1690	3740
		3	265	935	1060	3740	1000	1013	4000	4050
1/2	50-55	2-1/2	415	710	1660	2830	865	1260	3460	5040
		3	415	710	1660	2830	1023	1480	4090	5920
		4	415	710	1660	2830	1375	1643	5500	6570
5/8	90-95	2-5/8	–	–	–	–	795	1198	3180	4790
		3-1/2	–	–	–	–	1410	1760	5640	7040
		5	–	–	–	–	1943	2113	7770	8450
3/4	110-120	3-3/4	–	–	–	–	1678	1773	6710	7090
		5	–	–	–	–	2385	2800	9540	11200

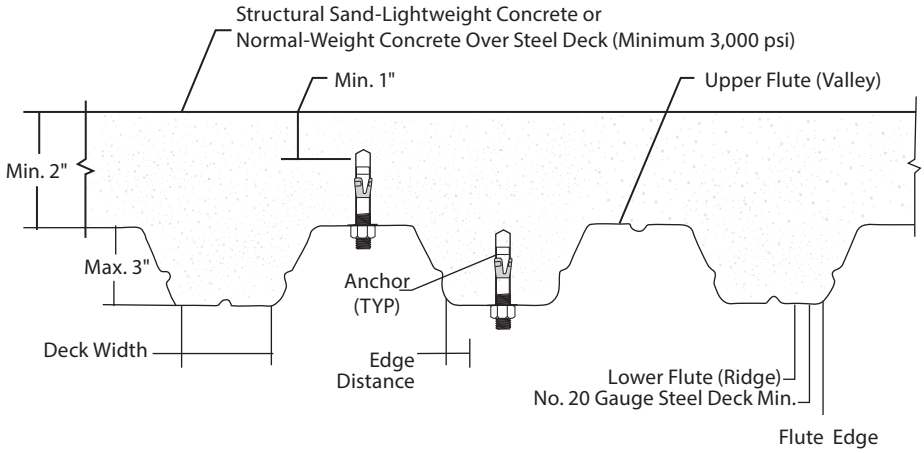

Ultimate and Allowable Loads (lbs.) – Grout-Filled Concrete Masonry

Anchor Diameter (in.)	Install Torque (ft.-lbs.)	Min. Embed. Depth (in.)	Min. Edge Distance (in.)	Min. End Distance (in.)	1,500 psi			
					Allowable		Ultimate	
					Tension	Shear	Tension	Shear
1/4	6-8	1-1/4	3-3/4	3-3/4	285	355	1140	1420
		2	5-1/4	3-3/4	335	355	1340	1420
3/8	20-25	1-3/4	5-5/8	5-5/8	425	650	1690	2600
		3	7-7/8	5-5/8	445	650	1780	2600
1/2	50-55	2-1/8	7-1/2	7-1/2	510	1250	2040	5000
		4	10-1/2	7-1/2	540	1250	2160	5000
5/8	90-95	2-5/8	9-3/8	9-3/8	655	1595	2620	6380
		5	13-1/8	9-3/8	765	1595	3060	6380
3/4	110-120	3-3/4	11-1/4	11-1/4	925	1990	3690	7960
		5	15-3/4	11-1/4	890	1990	3560	7960

Space and Edge Distance

Spacing in Normal-Weight (Tension and Shear)

(continues on page 10)

Anchor Dia. (in.)		1/4				3/8				1/2					5/8				
Embedment *hv*		1-1/4	1-1/2	2	2-3/4	1-3/4	2	3	4-1/4	2-1/8	3	4	5	6	2-5/8	3-1/2	4	5	7
Critical Spacing S_{cr}		2-1/2	3	4	5-1/2	3-1/4	4	6	8-1/2	4-1/4	6	8	10	12	5-1/4	7	8	10	14
Min. Spacing S_{min}		1-1/4	1-1/2	2	2-3/4	1-3/4	2	3	4-1/4	2-1/8	3	4	5	6	2-5/8	3-1/2	4	5	7
Actual Spacing S_{act}	**1-1/4**	0.50	-	-	-	-	-	-	-	-	-	-	-	-	-	-	-	-	-
	1-1/2	0.60	0.50	-	-	-	-	-	-	-	-	-	-	-	-	-	-	-	-
	1-3/4	0.70	0.58	-	-	0.50	-	-	-	-	-	-	-	-	-	-	-	-	-
	2	0.80	0.67	0.50	-	0.62	0.50	-	-	-	-	-	-	-	-	-	-	-	-
	2-1/8	0.85	0.71	0.53	-	0.65	0.53	-	-	0.50	-	-	-	-	-	-	-	-	-
	2-1/4	0.90	0.75	0.56	-	0.69	0.56	-	-	0.53	-	-	-	-	-	-	-	-	-
	2-1/2	1.00	0.83	0.63	-	0.77	0.63	-	-	0.59	-	-	-	-	-	-	-	-	-
	2-5/8	-	0.88	0.66	-	0.81	0.66	-	-	0.62	-	-	-	-	0.50	-	-	-	-
	2-3/4	-	0.92	0.69	0.50	0.85	0.69	-	-	0.65	-	-	-	-	0.52	-	-	-	-
	3	-	1.00	0.75	0.55	0.92	0.75	0.50	-	0.71	0.50	-	-	-	0.57	-	-	-	-
	3-1/4	-	-	0.81	0.59	1.00	0.81	0.54	-	0.77	0.54	-	-	-	0.62	-	-	-	-
	3-1/2	-	-	0.88	0.64	-	0.88	0.58	-	0.82	0.58	-	-	-	0.67	0.50	-	-	-
	4	-	-	1.00	0.73	-	1.00	0.67	-	0.94	0.67	0.50	-	-	0.76	0.57	0.50	-	-
	4-1/4	-	-	-	0.77	-	-	0.71	0.50	1.00	0.71	0.53	-	-	0.81	0.61	0.53	-	-
	4-1/2	-	-	-	0.82	-	-	0.75	0.53	-	0.75	0.56	-	-	0.86	0.64	0.56	-	-
	5	-	-	-	0.91	-	-	0.83	0.59	-	0.83	0.63	0.50	-	0.95	0.71	0.63	0.50	-
	5-1/4	-	-	-	0.96	-	-	0.88	0.62	-	0.88	0.66	0.53	-	1.00	0.75	0.66	0.53	-
	5-1/2	-	-	-	1.00	-	-	0.92	0.65	-	0.92	0.69	0.55	-	-	0.79	0.69	0.55	-
	6	-	-	-	-	-	-	1.00	0.71	-	1.00	0.75	0.60	0.50	-	0.86	0.75	0.60	-
	7	-	-	-	-	-	-	-	0.82	-	-	0.88	0.70	0.58	-	1.00	0.88	0.70	0.50
	8	-	-	-	-	-	-	-	0.94	-	-	1.00	0.80	0.67	-	-	1.00	0.80	0.57
	8-1/2	-	-	-	-	-	-	-	1.00	-	-	-	0.85	0.71	-	-	-	0.85	0.61
	10	-	-	-	-	-	-	-	-	-	-	-	1.00	0.83	-	-	-	1.00	0.71
	12	-	-	-	-	-	-	-	-	-	-	-	-	1.00	-	-	-	-	0.86
	14	-	-	-	-	-	-	-	-	-	-	-	-	-	-	-	-	-	1.00

For tension and shear anchor loads, the critical spacing (Scr) is equal to 2 embedment depths at which the anchor achieves 100% of load. Minimum spacing (Smin) is equal to 1 embedment depth at which the anchor achieves 50% of load.

Space and Edge Distance

Spacing in Normal-Weight (Tension and Shear)

(continued from page 9)

Anchor Dia. (in.)		3/4					7/8					1					1-1/4		
Embedment *hv*		3-3/4	4	5	6	7-7/8	4	4-1/2	5-3/4	7	8	5	5-1/2	6-1/2	8	9	5-5/8	7	10
Critical Spacing S_{cr}		7-1/2	8	10	12	15-3/4	8	9	11-1/2	14	16	10	11	13	16	18	11-1/4	14	20
Min. Spacing S_{min}		3-3/4	4	5	6	7-7/8	4	4-1/2	5-3/4	7	8	5	5-1/2	6-1/2	8	9	5-5/8	7	10
Actual Spacing S_{act}	**3-3/4**	0.50	-	-	-	-	-	-	-	-	-	-	-	-	-	-	-	-	-
	4	0.53	0.50	-	-	-	0.50	-	-	-	-	-	-	-	-	-	-	-	-
	4-1/2	0.60	0.56	-	-	-	0.56	0.50	-	-	-	-	-	-	-	-	-	-	-
	5	0.67	0.63	0.50	-	-	0.63	0.56	-	-	-	0.50	-	-	-	-	-	-	-
	5-1/2	0.73	0.69	0.55	-	-	0.69	0.61	-	-	-	0.55	0.50	-	-	-	-	-	-
	5-5/8	0.75	,70	0.56	-	-	0.70	0.63	-	-	-	0.56	0.51	-	-	-	0.50	-	-
	5-3/4	0.77	0.72	0.58	-	-	0.72	0.64	0.50	-	-	0.58	0.52	-	-	-	0.51	-	-
	6	0.80	0.75	0.60	0.50	-	0.75	0.67	0.52	-	-	0.60	0.55	-	-	-	0.53	-	-
	6-1/2	0.87	0.81	0.65	0.54	-	0.81	0.72	0.57	-	-	0.65	0.59	0.50	-	-	0.58	-	-
	6-3/4	0.90	0.84	0.68	0.56	-	0.84	0.75	0.59	-	-	0.68	0.61	0.52	-	-	0.60	-	-
	7	0.93	0.88	0.70	0.58	-	0.88	0.78	0.61	0.50	-	0.70	0.64	0.54	-	-	0.62	0.50	-
	7-1/2	1.00	0.94	0.75	0.63	-	0.94	0.83	0.65	0.54	-	0.75	0.68	0.58	-	-	0.67	0.54	-
	7-3/4	-	0.97	0.78	0.65	-	0.97	0.86	0.67	0.55	-	0.78	0.70	0.60	-	-	0.69	0.55	-
	7-7/8	-	0.98	0.79	0.66	0.50	0.98	0.88	0.69	0.56	-	0.79	0.72	0.62	-	-	0.70	0.56	-
	8	-	1.00	0.80	0.67	0.51	1.00	0.89	0.70	0.57	0.50	0.80	0.73	0.62	0.50	-	0.71	0.57	-
	9	-	-	0.90	0.75	0.57	-	1.00	0.78	0.64	0.56	0.90	0.82	0.69	0.56	0.50	0.80	0.64	-
	10	-	-	1.00	0.83	0.64	-	-	0.87	0.71	0.63	1.00	0.91	0.77	0.63	0.56	0.89	0.71	0.50
	11	-	-	-	0.92	0.70	-	-	0.96	0.79	0.69	-	1.00	0.85	0.69	0.61	0.98	0.79	0.55
	11-1/4	-	-	-	0.94	0.71	-	-	0.98	0.80	0.70	-	-	0.87	0.70	0.63	1.00	0.80	0.56
	11-1/2	-	-	-	0.96	0.73	-	-	1.00	0.82	0.72	-	-	0.88	0.72	0.64	-	0.82	0.58
	12	-	-	-	1.00	0.76	-	-	-	0.86	0.75	-	-	0.92	0.75	0.67	-	0.86	0.60
	13	-	-	-	-	0.83	-	-	-	0.93	0.81	-	-	1.00	0.81	0.72	-	0.93	0.65
	14	-	-	-	-	0.89	-	-	-	1.00	0.88	-	-	-	0.88	0.78	-	1.00	0.70
	15-3/4	-	-	-	-	1.00	-	-	-	-	0.98	-	-	-	0.98	0.88	-	-	0.79
	16	-	-	-	-	-	-	-	-	-	1.00	-	-	-	1.00	0.89	-	-	0.80
	18	-	-	-	-	-	-	-	-	-	-	-	-	-	-	1.00	-	-	0.90
	20	-	-	-	-	-	-	-	-	-	-	-	-	-	-	-	-	-	1.00

For tension and shear anchor loads, the critical spacing (Scr) is equal to 2 embedment depths at which the anchor achieves 100% of load. Minimum spacing (Smin) is equal to 1 embedment depth at which the anchor achieves 50% of load.

Edge in Normal-Weight Concrete (Tenison)

Anchor Dia. (in.)		1/4	3/8	1/2	5/8	3/4	7/8	1	1-1/4
Critical Edge Dist. *Ccr*		3	4-1/2	6	7-1/2	9	10-1/2	12	15
Min. Edge Dist. *Cmin*		1-1/4	1-7/8	2-1/2	3-1/8	3-3/4	4-3/8	5	6-1/4
Actual Edge Dist. C_{act}	1-1/4	0.75	-	-	-	-	-	-	-
	1-7/8	0.84	0.75	-	-	-	-	-	-
	2-1/2	0.93	0.81	0.75	-	-	-	-	-
	3	1.00	0.86	0.79	-	-	-	-	-
	3-1/8	-	0.87	0.79	0.75	-	-	-	-
	3-3/4	-	0.93	0.84	0.79	0.75	-	-	-
	4-3/8	-	0.99	0.88	0.82	0.78	0.75	-	-
	4-1/2	-	1.00	0.89	0.83	0.79	0.76	-	-
	5	-	-	0.93	0.86	0.81	0.78	0.75	-
	6	-	-	1.00	0.91	0.86	0.82	0.79	-
	6-1/4	-	-	-	0.93	0.87	0.83	0.79	0.75
	7-1/2	-	-	-	1.00	0.93	0.88	0.84	n/a
	9	-	-	-	-	1.00	0.94	0.89	n/a
	10-1/2	-	-	-	-	-	1.00	0.95	n/a
	12	-	-	-	-	-	-	1.00	n/a
	15	-	-	-	-	-	-	-	1.00

For tension anchor loads, the critical edge distance (Ccr) is equal to 12 anchor diameters at which the anchor achieves 100% of load. Minimum edge distance (Cmin) is equal to 5 anchor diameters at which the anchor achieves 75% of load.

Edge in Normal-Weight Concrete (Shear)

Anchor Dia. (in.)		1/4	3/8	1/2	5/8	3/4	7/8	1	1-1/4
Critical Edge Dist. *Ccr*		3	4 1/2	6	7-1/2	9	10-1/2	12	15
Min. Edge Dist. *Cmin*		1-1/4	1-7/8	2-1/2	3-1/8	3-3/4	4-3/8	5	6-1/4
Actual Edge Dist. C_{act}	1-1/4	0.35	-	-	-	-	-	-	-
	1-7/8	0.58	0.35	-	-	-	-	-	-
	2-1/2	0.81	0.50	0.35	-	-	-	-	-
	3	1.00	0.63	0.44	-	-	-	-	-
	3-1/8	-	0.66	0.47	0.35	-	-	-	-
	3-3/4	-	0.81	0.58	0.44	0.35	-	-	-
	4-3/8	-	0.97	0.70	0.54	0.43	0.35	-	-
	4-1/2	-	1.00	0.72	0.55	0.44	0.36	-	-
	5	-	-	0.81	0.63	0.50	0.42	0.35	-
	6	-	-	1.00	0.78	0.63	0.52	0.44	-
	6-1/4	-	-	-	0.81	0.66	0.55	0.47	0.35
	7-1/2	-	-	-	1.00	0.81	0.68	0.58	n/a
	9	-	-	-	-	1.00	0.84	0.72	n/a
	10-1/2	-	-	-	-	-	1.00	0.86	n/a
	12	-	-	-	-	-	-	1.00	n/a
	15	-	-	-	-	-	-	-	1.00

For shear anchor loads, the critical edge distance (Ccr) is equal to 12 anchor diameters at which the anchor achieves 100% of load. Minimum edge distance (Cmin) is equal to 5 anchor diameters at which the anchor achieves 35% of load.

Ankr-TITE® Wedge Anchors

Order Information

Zinc-Plated Carbon Steel					
Catalog No.	Anchor Size (in.)	Min. Embed. (in.)	Thread Length (in.)	Quantity Box	Quantity Carton
AT1413	1/4 x 1-3/4	1-1/4	3/4	100	800
AT1421	1/4 x 2-1/4	1-1/4	1-1/4	100	800
AT1431	1/4 x 3-1/4	1-1/4	2-1/4	100	800
AT3821	3/8 x 2-1/4	1-3/4	1	50	400
AT3823	3/8 x 2-3/4	1-3/4	1-1/2	50	400
AT3830	3/8 x 3	1-3/4	1-3/4	50	400
AT3833	3/8 x 3-3/4	1-3/4	2-1/2	50	400
AT3850	3/8 x 5	1-3/4	3-1/4	50	400
AT3870	3/8 x 7	1-3/4	4-1/2	50	300
AT1223	1/2 x 2-3/4	2-1/8	1-1/8	25	200
AT1233	1/2 x 3-3/4	2-1/8	2-1/8	25	200
AT1241	1/2 x 4-1/4	2-1/8	2-5/8	25	200
AT1242	1/2 x 4-1/2	2-1/8	2-5/8	25	200
AT1252	1/2 x 5-1/2	2-1/8	3-3/4	25	150
AT1270	1/2 x 7	2-1/8	4-1/2	25	150
AT1282	1/2 x 8-1/2	2-1/8	5	10	40
AT1210	1/2 x 10	2-1/8	5	10	40
AT5832	5/8 x 3-1/2	2-5/8	1-1/2	10	80
AT5841	5/8 x 4-1/4	2-5/8	2-3/8	10	80
AT5842*	5/8 x 4-1/2	2-5/8	2-5/8	10	80
AT5850	5/8 x 5	2-5/8	3-1/8	10	80
AT5860	5/8 x 6	2-5/8	4	10	80
AT5870	5/8 x 7	2-5/8	4-1/2	10	80
AT5882	5/8 x 8-1/2	2-5/8	5	10	40
AT5810	5/8 x 10	2-5/8	5	10	40
AT5812	5/8 x 12	2-5/8	5	10	40

Zinc-Plated Carbon Steel					
Catalog No.	Anchor Size (in.)	Min. Embed. (in.)	Thread Length (in.)	Quantity Box	Quantity Carton
AT3441	3/4 x 4-1/4	3-1/4	2	10	80
AT3443	3/4 x 4-3/4	3-1/4	2-1/2	10	80
AT3452	3/4 x 5-1/2	3-1/4	3-1/4	10	60
AT3461	3/4 x 6-1/4	3-1/4	3-3/4	10	60
AT3470	3/4 x 7	3-1/4	4-3/4	10	60
AT3482	3/4 x 8-1/2	3-1/4	5	10	40
AT3410	3/4 x 10	3-1/4	5	10	40
AT3412	3/4 x 12	3-1/4	5	5	20
AT7860	7/8 x 6	3-7/8	3-1/2	5	30
AT7880	7/8 x 8	3-7/8	5	5	20
AT7810	7/8 x 10	3-7/8	5	5	20
AT1060	1 x 6	4	3	5	30
AT1090	1 x 9	4	5	5	20
AT1012	1 x 12	4	5	5	20
AT11490	1-1/4 x 9	5-5/8	5	4	12
AT11412	1-1/4 x 12	5-5/8	5	4	12

*Special Order

Carbon Steel Wej-It Tie Wire (WTW) Anchors					
Catalog No.	Anchor Size (in.)	Min. Embed. (in.)	Eye Dia. (in.)	Quantity Box	Quantity Carton
WTW1421	1/4 x 2-1/4	1-1/4	9/32	100	1000

Hot-Dip Galvanized Steel with Type 304 SS Clip					
Catalog No.	Anchor Size (in.)	Min. Embed. (in.)	Thread Length (in.)	Quantity Box	Quantity Carton
ATG1413	1/4 x 1-3/4	1-1/4	3/4	100	800
ATG1421	1/4 x 2-1/4	1-1/4	1-1/4	100	800
ATG1431	1/4 x 3-1/4	1-1/4	2-1/4	100	800
ATG3821	3/8 x 2-1/4	1-3/4	1	50	400
ATG3823	3/8 x 2-3/4	1-3/4	1-1/2	50	400
ATG3830	3/8 x 3	1-3/4	1-3/4	50	400
ATG3833	3/8 x 3-3/4	1-3/4	2-1/2	50	400
ATG3850	3/8 x 5	1-3/4	3-1/4	50	400
ATG3870	3/8 x 7	1-3/4	4-1/2	50	300
ATG1223	1/2 x 2-3/4	2-1/8	1-1/8	25	200
ATG1233	1/2 x 3-3/4	2-1/8	2-1/8	25	200
ATG1241	1/2 x 4-1/4	2-1/8	2-5/8	25	200
ATG1242*	1/2 x 4-1/2	2-1/8	2-5/8	25	200
ATG1252	1/2 x 5-1/2	2-1/8	3-3/4	25	150
ATG1270	1/2 x 7	2-1/8	4-1/2	25	150
ATG1282	1/2 x 8-1/2	2-1/8	5	10	40
ATG1210	1/2 x 10	2-1/8	5	10	40
ATG5832	5/8 x 3-1/2	2-5/8	1-1/2	10	80
ATG5841	5/8 x 4-1/4	2-5/8	2-3/8	10	80
ATG5842*	5/8 x 4-1/2	2-5/8	2-5/8	10	80
ATG5850	5/8 x 5	2-5/8	3-1/8	10	80
ATG5860	5/8 x 6	2-5/8	4	10	80
ATG5870	5/8 x 7	2-5/8	4-1/2	10	80
ATG5882	5/8 x 8-1/2	2-5/8	5	10	40
ATG5810	5/8 x 10	2-5/8	5	10	40
ATG5812	5/8 x 12	2-5/8	5	10	40

Hot-Dip Galvanized Steel with Type 304 SS Clip					
Catalog No.	Anchor Size (in.)	Min. Embed. (in.)	Thread Length (in.)	Quantity Box	Quantity Carton
ATG3441	3/4 x 4-1/4	3-1/4	2	10	80
ATG3443	3/4 x 4-3/4	3-1/4	2-1/2	10	80
ATG3452	3/4 x 5-1/2	3-1/4	3-1/4	10	60
ATG3461	3/4 x 6-1/4	3-1/4	3-3/4	10	60
ATG3470	3/4 x 7	3-1/4	4-3/4	10	60
ATG3482	3/4 x 8-1/2	3-1/4	5	10	40
ATG3410	3/4 x 10	3-1/4	5	10	40
ATG3412	3/4 x 12	3-1/4	5	4	16
ATG7860	7/8 x 6	3-7/8	3-1/2	4	24
ATG7880	7/8 x 8	3-7/8	5	4	16
ATG7810	7/8 x 10	3-7/8	5	4	16
ATG1060	1 x 6	4	3	4	24
ATG1090	1 x 9	4	5	4	16
ATG1012	1 x 12	4	5	4	16
ATG11490*	1-1/4 x 9	5-5/8	5	4	12
ATG11412*	1-1/4 x 12	5-5/8	5	4	12

*Special Order

Ankr-TITE® Wedge Anchors

Order Information

Type 304 Stainless Steel					
Catalog No.	Anchor Size (in.)	Min. Embed. (in.)	Thread Length (in.)	Quantity Box	Quantity Carton
ATS1413	1/4 x 1-3/4	1-1/4	3/4	100	800
ATS1421	1/4 x 2-1/4	1-1/4	1-1/4	100	800
ATS1431	1/4 x 3-1/4	1-1/4	2-1/4	100	800
ATS3821	3/8 x 2-1/4	1-3/4	1	50	400
ATS3823	3/8 x 2-3/4	1-3/4	1-1/2	50	400
ATS3830	3/8 x 3	1-3/4	1-3/4	50	400
ATS3833	3/8 x 3-3/4	1-3/4	2-1/2	50	400
ATS3850	3/8 x 5	1-3/4	3-1/4	50	400
ATS3870	3/8 x 7	1-3/4	4-1/2	50	300
ATS1223	1/2 x 2-3/4	2-1/8	1-1/8	25	200
ATS1233	1/2 x 3-3/4	2-1/8	2-1/8	25	200
ATS1241	1/2 x 4-1/4	2-1/8	2-5/8	25	200
ATS1242	1/2 x 4-1/2	2-1/8	2-5/8	25	200
ATS1252	1/2 x 5-1/2	2-1/8	3-3/4	25	150
ATS1270	1/2 x 7	2-1/8	4-1/2	25	150
ATS1282	1/2 x 8-1/2	2-1/8	5	10	40
ATS1210	1/2 x 10	2-1/8	5	10	40
ATS5832	5/8 x 3-1/2	2-5/8	1-1/2	10	80
ATS5841	5/8 x 4-1/4	2-5/8	2-3/8	10	80
ATS5842*	5/8 x 4-1/2	2-5/8	2-5/8	10	80
ATS5850	5/8 x 5	2-5/8	3-1/8	10	80
ATS5860	5/8 x 6	2-5/8	4	10	80
ATS5870	5/8 x 7	2-5/8	4-1/2	10	80
ATS5882	5/8 x 8-1/2	2-5/8	5	10	40
ATS5810	5/8 x 10	2-5/8	5	10	40
ATS5812*	5/8 x 12	2-5/8	5	10	40

Type 304 Stainless Steel					
Catalog No.	Anchor Size (in.)	Min. Embed. (in.)	Thread Length (in.)	Quantity Box	Quantity Carton
ATS3441	3/4 x 4-1/4	3-1/4	2	10	80
ATS3443	3/4 x 4-3/4	3-1/4	2-1/2	10	80
ATS3452	3/4 x 5-1/2	3-1/4	3-1/4	10	60
ATS3461	3/4 x 6-1/4	3-1/4	3-3/4	10	60
ATS3470	3/4 x 7	3-1/4	4-3/4	10	60
ATS3482	3/4 x 8-1/2	3-1/4	5	10	40
ATS3410	3/4 x 10	3-1/4	5	10	40
ATS3412	3/4 x 12	3-1/4	5	5	20
ATS7860	7/8 x 6	3-7/8	3-1/2	5	30
ATS7880	7/8 x 8	3-7/8	5	5	20
ATS7810	7/8 x 10	3-7/8	5	5	20
ATS1060	1 x 6	4	3	5	30
ATS1090	1 x 9	4	5	5	20
ATS1012	1 x 12	4	5	5	20
ATS11490*	1-1/4 x 9	5-5/8	5	4	12
ATS11412*	1-1/4 x 12	5-5/8	5	4	12

*Special Order

Type 316 Stainless Steel					
Catalog No.	Anchor Size (in.)	Min. Embed. (in.)	Thread Length (in.)	Quantity Box	Quantity Carton
ATSS1413	1/4 x 1-3/4	1-1/4	3/4	100	800
ATSS1421	1/4 x 2-1/4	1-1/4	1-1/4	100	800
ATSS1431	1/4 x 3-1/4	1-1/4	2-1/4	100	800
ATSS3821	3/8 x 2-1/4	1-3/4	1	50	400
ATSS3823	3/8 x 2-3/4	1-3/4	1-1/2	50	400
ATSS3830	3/8 x 3	1-3/4	1-3/4	50	400
ATSS3833	3/8 x 3-3/4	1-3/4	2-1/2	50	400
ATSS3850	3/8 x 5	1-3/4	3-1/4	50	400
ATSS3870	3/8 x 7	1-3/4	4-1/2	50	300
ATSS1223	1/2 x 2-3/4	2-1/8	1-1/8	25	200
ATSS1233	1/2 x 3-3/4	2-1/8	2-1/8	25	200
ATSS1241	1/2 x 4-1/4	2-1/8	2-5/8	25	200
ATSS1242*	1/2 x 4-1/2	2-1/8	2-5/8	25	200
ATSS1252	1/2 x 5-1/2	2-1/8	3-3/4	25	150
ATSS1270	1/2 x 7	2-1/8	4-1/2	25	150
ATSS1282	1/2 x 8-1/2	2-1/8	5	10	40
ATSS1210	1/2 x 10	2-1/8	5	10	40
ATSS5832	5/8 x 3-1/2	2-5/8	1-1/2	10	80
ATSS5841	5/8 x 4-1/4	2-5/8	2-3/8	10	80
ATSS5842*	5/8 x 4-1/2	2-5/8	2-5/8	10	80
ATSS5850	5/8 x 5	2-5/8	3-1/8	10	80
ATSS5860	5/8 x 6	2-5/8	4	10	80
ATSS5870	5/8 x 7	2-5/8	4-1/2	10	80
ATSS5882	5/8 x 8-1/2	2-5/8	5	10	40
ATSS5810	5/8 x 10	2-5/8	5	10	40
ATSS5812*	5/8 x 12	2-5/8	5	10	40

Type 316 Stainless Steel					
Catalog No.	Anchor Size (in.)	Min. Embed. (in.)	Thread Length (in.)	Quantity Box	Quantity Carton
ATSS3441	3/4 x 4-1/4	3-1/4	2	10	80
ATSS3443	3/4 x 4-3/4	3-1/4	2-1/2	10	80
ATSS3452	3/4 x 5-1/2	3-1/4	3-1/4	10	60
ATSS3461	3/4 x 6-1/4	3-1/4	3-3/4	10	60
ATSS3470	3/4 x 7	3-1/4	4-3/4	10	60
ATSS3482	3/4 x 8-1/2	3-1/4	5	10	40
ATSS3410	3/4 x 10	3-1/4	5	10	40
ATSS3412	3/4 x 12	3-1/4	5	5	20
ATSS7860	7/8 x 6	3-7/8	3-1/2	5	30
ATSS7880	7/8 x 8	3-7/8	5	5	20
ATSS7810	7/8 x 10	3-7/8	5	5	20
ATSS1060	1 x 6	4	3	5	30
ATSS1090	1 x 9	4	5	5	20
ATSS1012	1 x 12	4	5	5	20
ATSS11490*	1-1/4 x 9	5-5/8	5	4	12
ATSS11412*	1-1/4 x 12	5-5/8	5	4	12

*Special Order

For more information, please contact:

TOGGLER® HIGH-PERFORMANCE ANCHORS®

wej-it® HIGH-PERFORMANCE ANCHORS

Divisions of Mechanical Plastics Corp.
110 Richards Avenue • Norwalk, CT 06854

Phone: 203-857-2200
Fax: 203-857-2201 • **E-mail:** sales@wejit.com
www.toggler.com • www.wejit.com

Ankr-TITE™, TOGGLER logo and typeface, Wej-It® and High-Performance Anchors® are trademarks of Mechanical Plastics Corp. ©2014 Mechanical Plastics Corp. Rev. 8/15